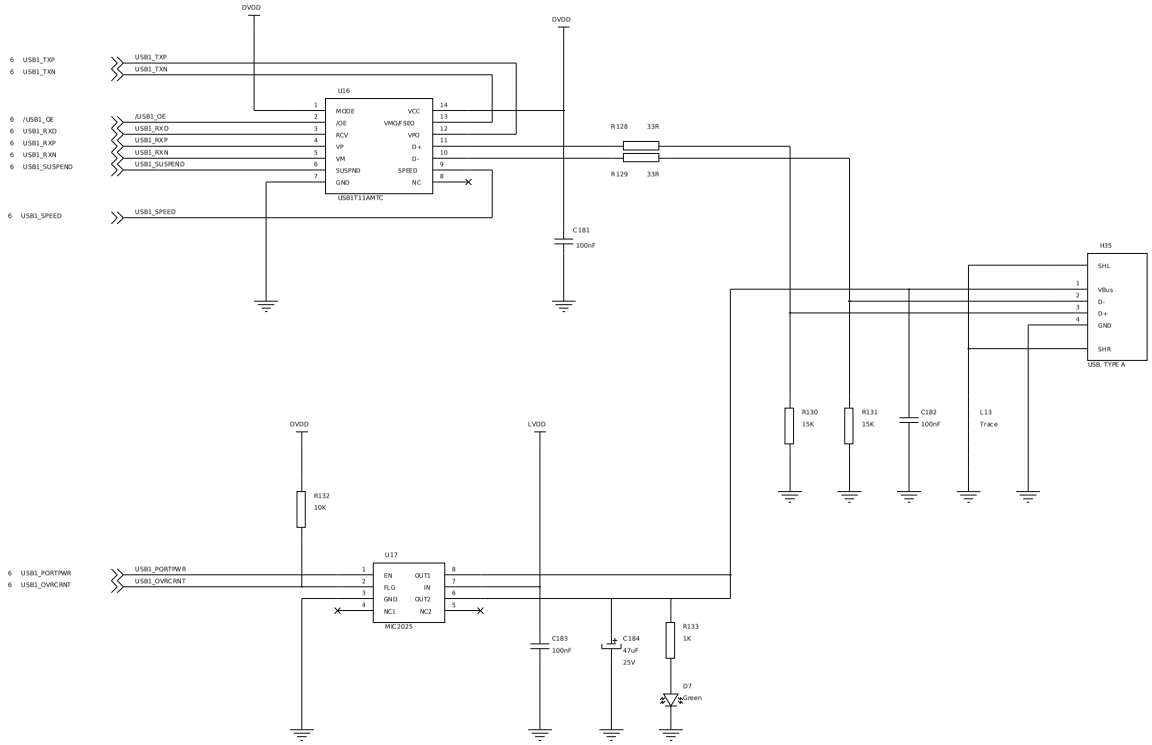


| | | | |
|---|---|---|---|
| Title | Prototype II: USB | | |
| Size A3 | Document Number 101 | | Rev 0.1 |
| Date: Tuesday, December 11, 2007 | | Sheet 8 of 8 | |